MORE FROM WOOD.

EGGER

EGGER Comfort Flooring

Warm, silent, environmentally friendly.

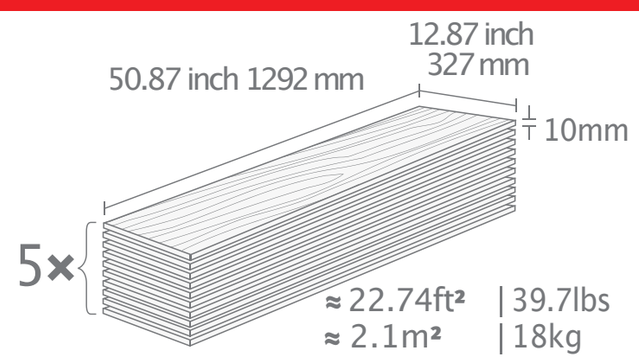

32
EN16511

20 years* Limited Residential Warranty*
Kingsize
CLIC it!
10 mm
PVC pvc free

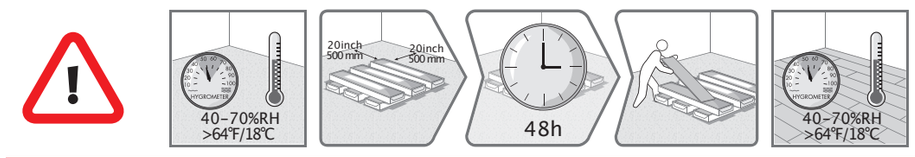

Light Commercial Use

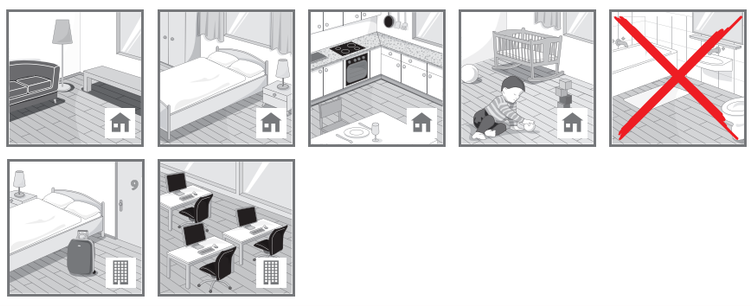

EUROPEAN LAMINATE EPLF MADE WITH WOOD

BLUE ANGEL THE GERMAN ECOLABEL
www.blauer-engel.de/uz176

EMISSION CLASS FOR BUILDING MATERIAL RTS M1

CARB2 compliant

PEFC
PEFC/06-38-171

EU Ecolabel
www.ecolabel.eu
EU Ecolabel : DE/035/003

GREENGUARD GOLD
PRODUCTCERTIFIEDFORLOW CHEMICALEMISSIONS:UL.COM/GG UL2818

✆ **Emergency Phone Number:** +1–800–424–9300

WARNING: This product can expose you to chemicals including Formaldehyde which is known to the State of California to cause cancer.
For more information go to HYPERLINK: www.P65Warnings.ca.gov
Drilling, sawing or machining wood products generates wood dust, a substance known to cause cancer. Avoid inhaling wood dust or use a NIOSH-approved half-mask respirator, side shielded safety glasses and other safeguards for personal protection.

EF2378 01/2021

CLIC it!

VIDEO
www.egger.com/qr-installation-clicit

A

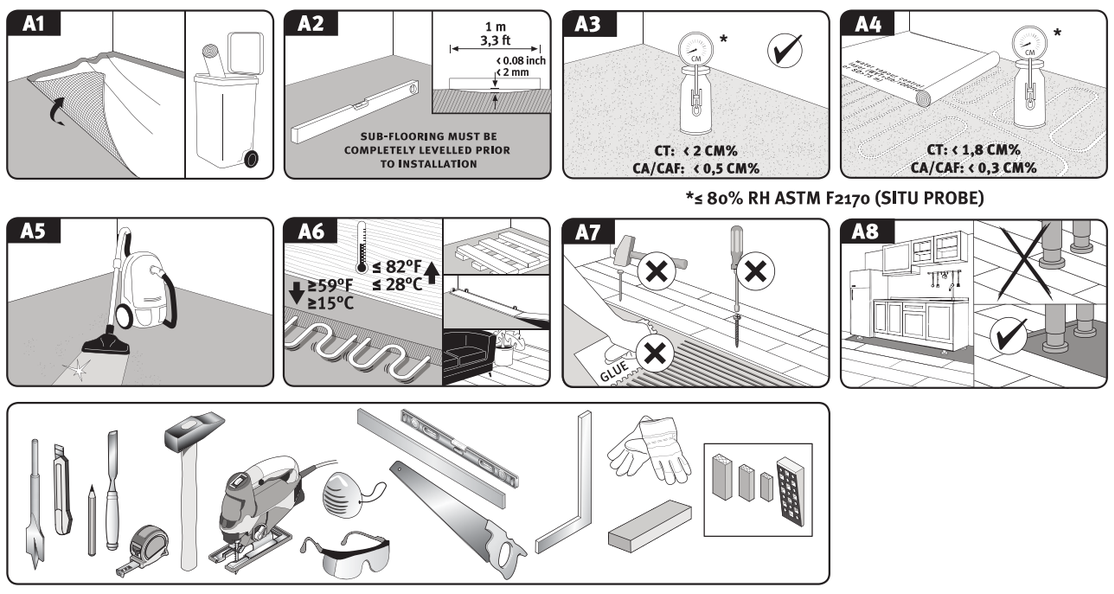

B

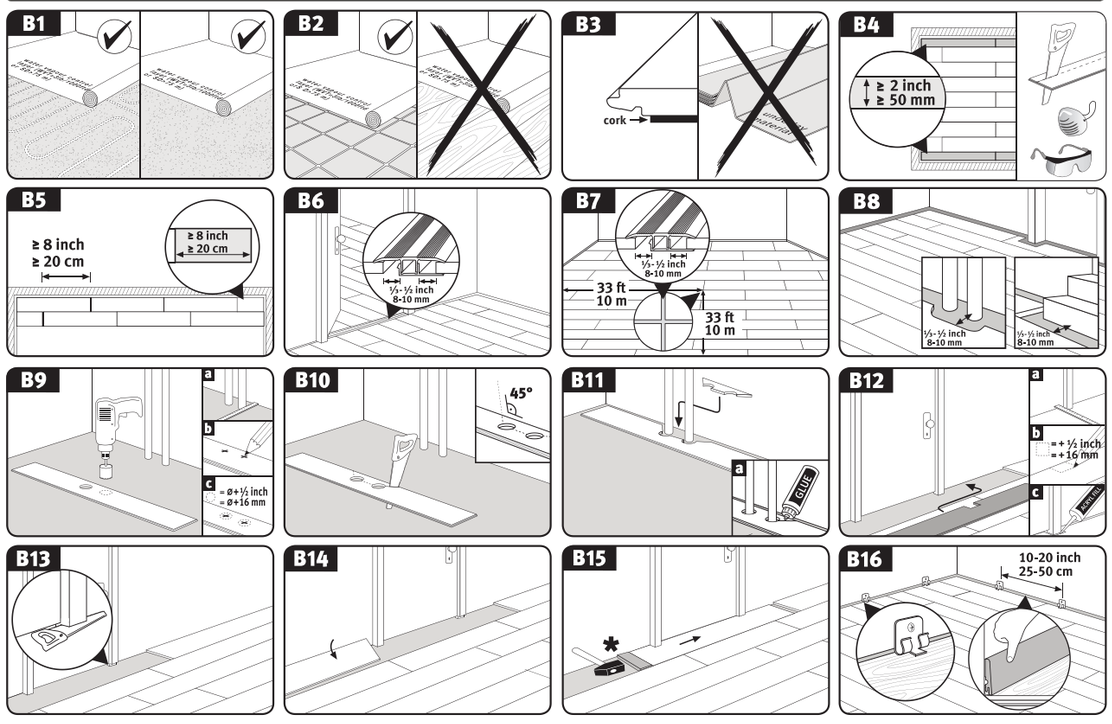

C

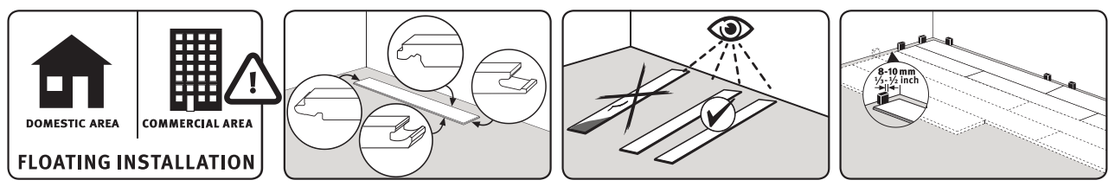

Option A

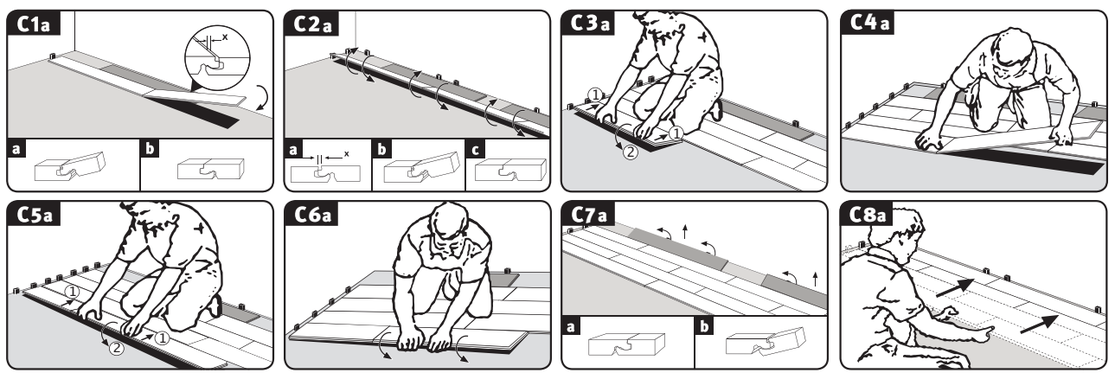

Option B

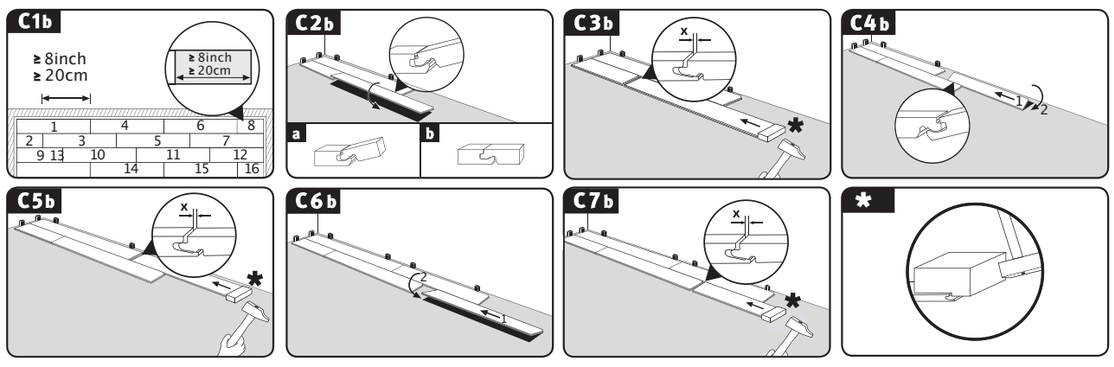

Option C

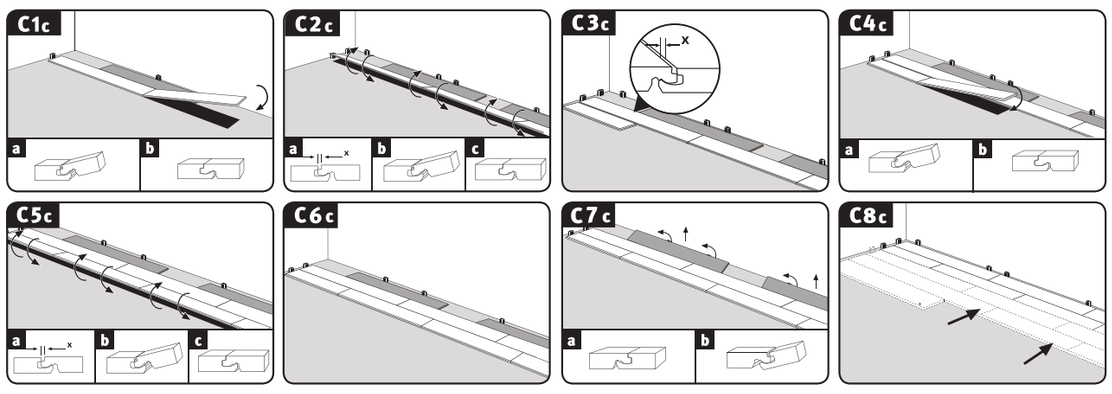

D

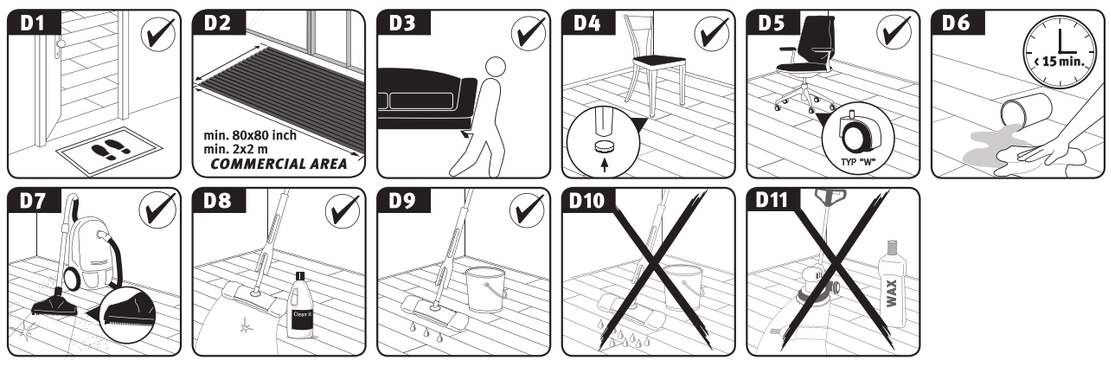

Notices of provisional status
These processing instructions have been carefully drawn up to the best of our knowledge. It is intended for information only and does not constitute a guarantee in terms of product properties or its suitability for specific applications. We accept no liability for any mistakes, errors in standards, or printing errors. In addition, technical modifications may result from the continuous development of EGGER Floorings, as well as from changes to standards and public law documents. Subject to technical modifications and printing errors.

www.egger.com

EGGER Flooring International GmbH & Co.KG
Am Haffeld 1
23970 Wismar
T +49 3841 301-0, F +49 3841 301-20222
flooring@egger.com